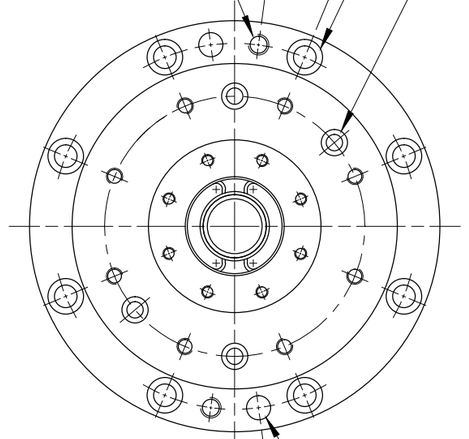

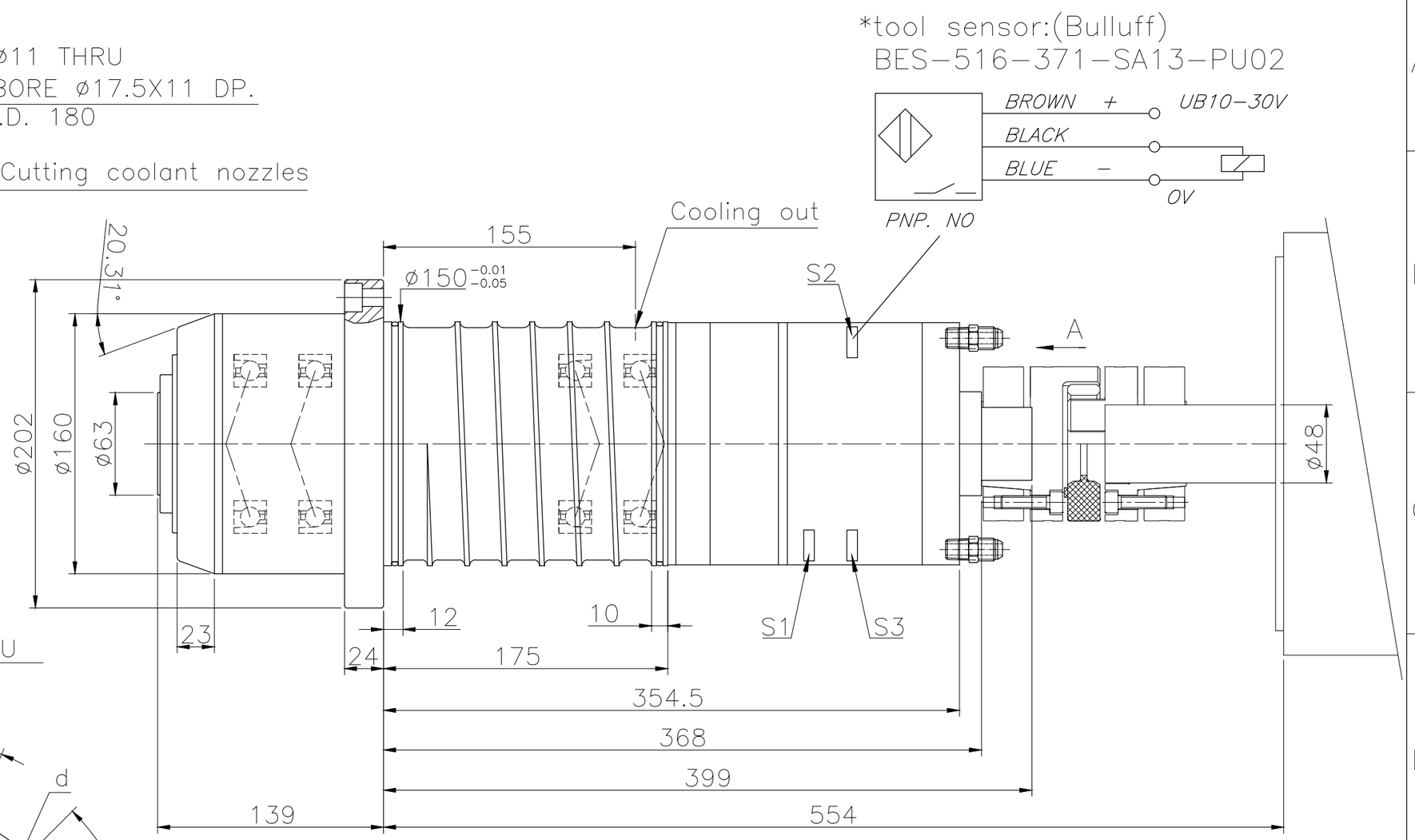

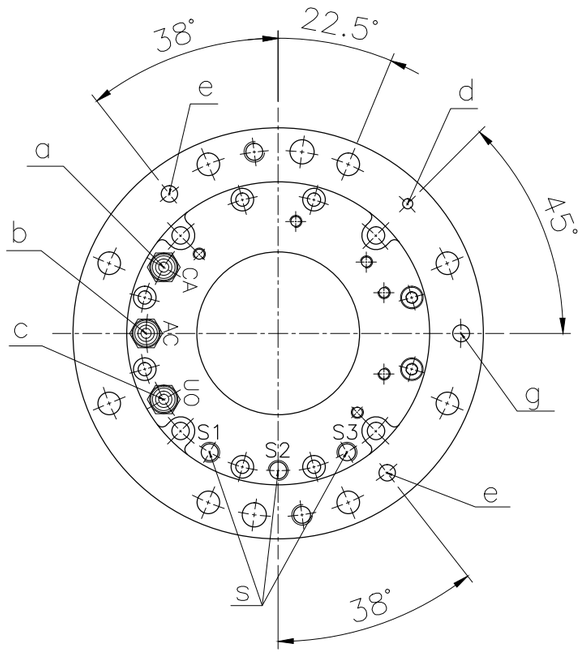

A VIEW

a	CA:Tool clamping	Max. speed	15000 rpm
b	AC:Tool holder clean	Tool system	HSK A63
c	UO:Tool unclamping	Clamping force	18KN
d	Air seal	Spindle bearings	4-7014
e	External coolant inlet	Cooling lubrication	Grease
S1 S2 S3	Tool clamping/unclamping sensor	Cooling system	Oil
		Coupling	ø45-ø48-Dø95-L126
g	Coolant inlet	Note	S.T.D.

	Tool unclamping	Tool clamping	Without tool
S1	1	0	0
S2	0	1	0
S3	0	1	1

PERMISSIBLE MACHING BASIC DIMENSION DEVIATIONS					
>0	>6	>30	>120	>400	>1000
±0.05	±0.10	±0.15	±0.20	±0.30	±0.50
PERMISSIBLE DRILLING BASIC DIMENSION DEVIATIONS					+0.25 -0.05
PERMISSIBLE ANGLE BASIC DIMENSION DEVIATIONS					±0.5°

DRAWN		
DESIGNED		
APPROVED		
MATERIAL		
SCALE	1:3	

setco Precision Solutions

NAME

DWG.NO. 101AAJ0_DIM