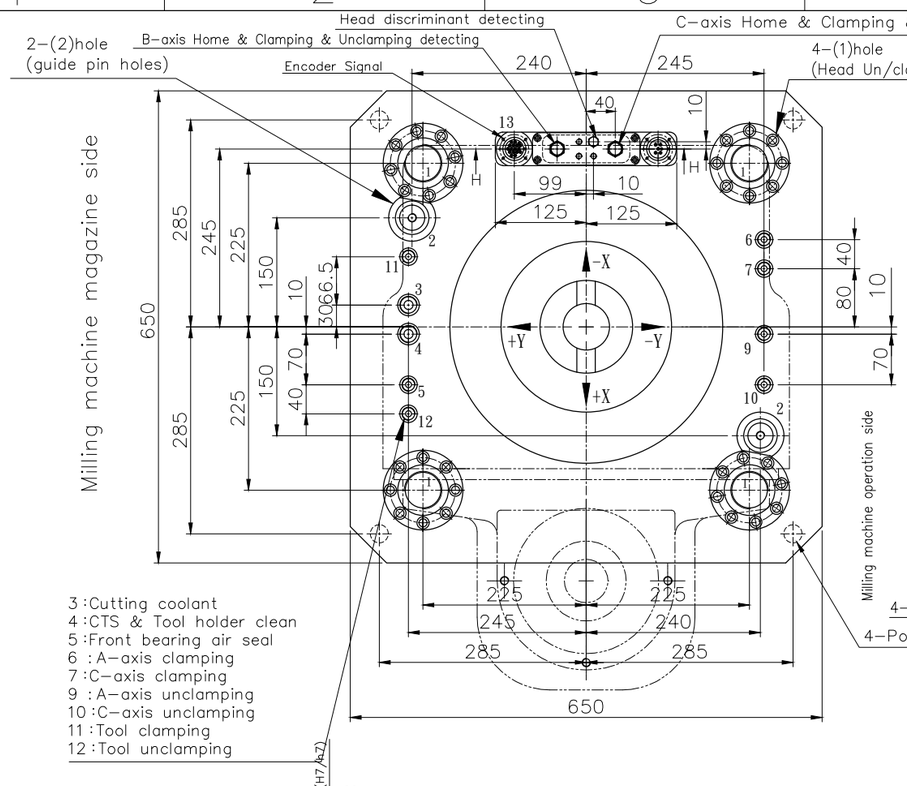

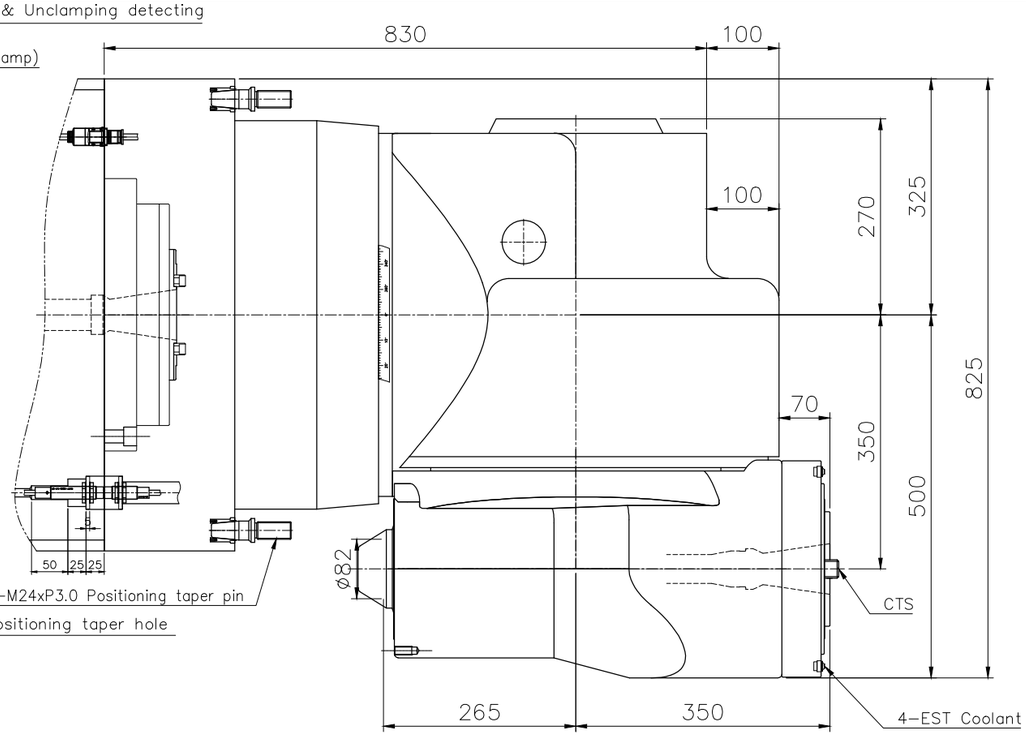

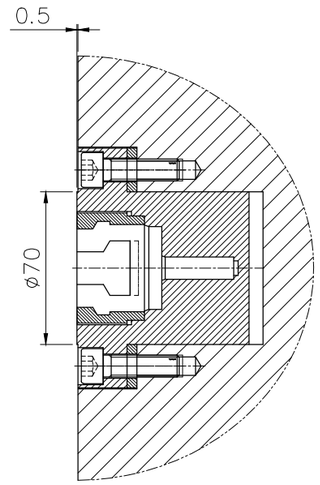

PULL STUD SLEEVE DETAL
(S=3:1)

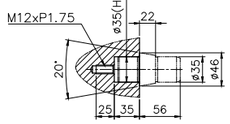

Guide pin & Pin hole Dimensional drawings
(Machining in the ram)

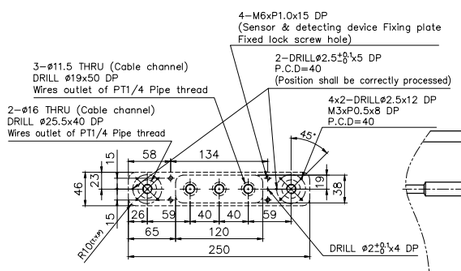

Electric quick connector & Sensor &
detecting device
Mounting groove Dimensional drawings
(Machining in the ram)

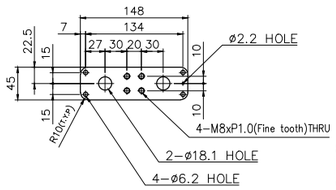

Sensor & detecting device Fixing plate
Dimensional drawings(Thickness=5t)

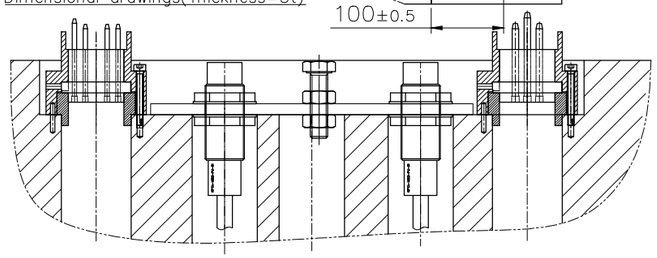

SECTION H-H(S=3:1)

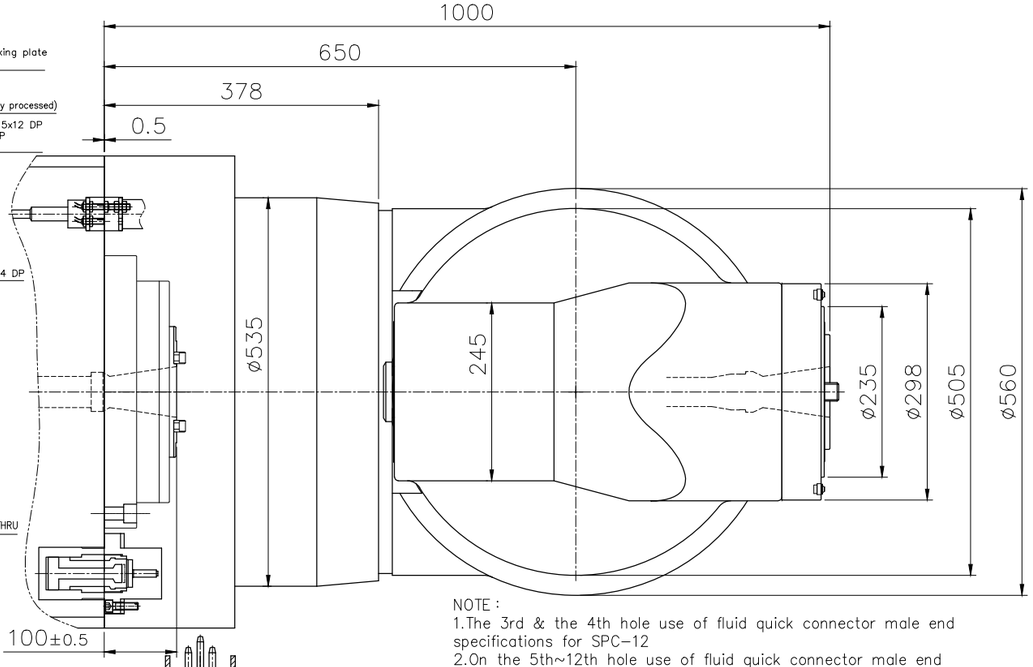

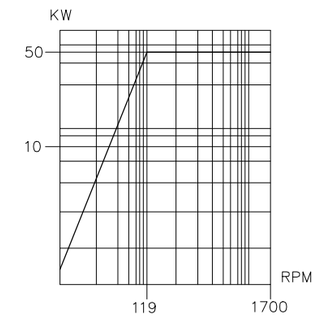

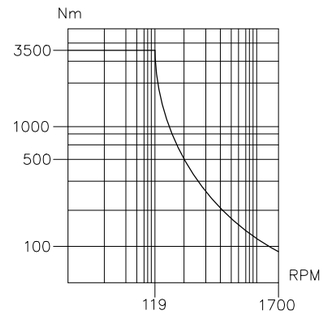

AHC MULTI SWIVELING HEAD SPEC.	
Tool interface	ISO50 DIN Automatic
Spindle gear	50 kW
Spindle speed	1,700 rpm
Spindle torque	4,000 Nm
Spindle rotation	By Ram
Work position	Vertical
Transmission ratio	1:1
Coolant	INT 20 bar (CTS)
	EST 4/6 bar
Air pressure	6 bar
Tool clamping	Automatic
Head clamping	Automatic
Indexing C&A axis	2.5°
Rotation B axis	±110°
Rotation C axis	-90°~180°
Tool clamping force	2,400 kgf
Lubrucation	Grease
Volume (LxWxH)	650x935x1190mm

NOTE :
1.The 3rd & the 4th hole use of fluid quick connector male end specifications for SPC-12
2.On the 5th~12th hole use of fluid quick connector male end specifications for SPC-08
3.The 13th hole electrical use of quick connector male end specifications for ME2-15+PE-BP2

PERMISSIBLE MACHING BASIC DIMENSION DEVIATIONS					
>0	>6	>30	>120	>400	>1000
±0.05	±0.10	±0.15	±0.20	±0.30	±0.50
PERMISSIBLE DRILLING BASIC DIMENSION DEVIATIONS					+0.25 -0.05
PERMISSIBLE ANGLE BASIC DIMENSION DEVIATIONS					±0.5°

DRAWN		
DESIGNED		
CHECKED		
MATERIAL		
SCALE	1:7	

setco Precision Solutions

NAME

DWG.NO. A58F01-ACA-CT