90 DEGREE ANGLE HEAD SPEC.	
Tool interface	MAS#50 7/24Taper
Max. Speed	2,500 rpm
Tool Clamping	M24 Bolt
Lubrication	OIL
Gear Ratio	1 :1
MAX. TRANSMISSION POWER	11 kW
Volume (LxWxH)	384.2x300x486.8mm
Weight	85 kg

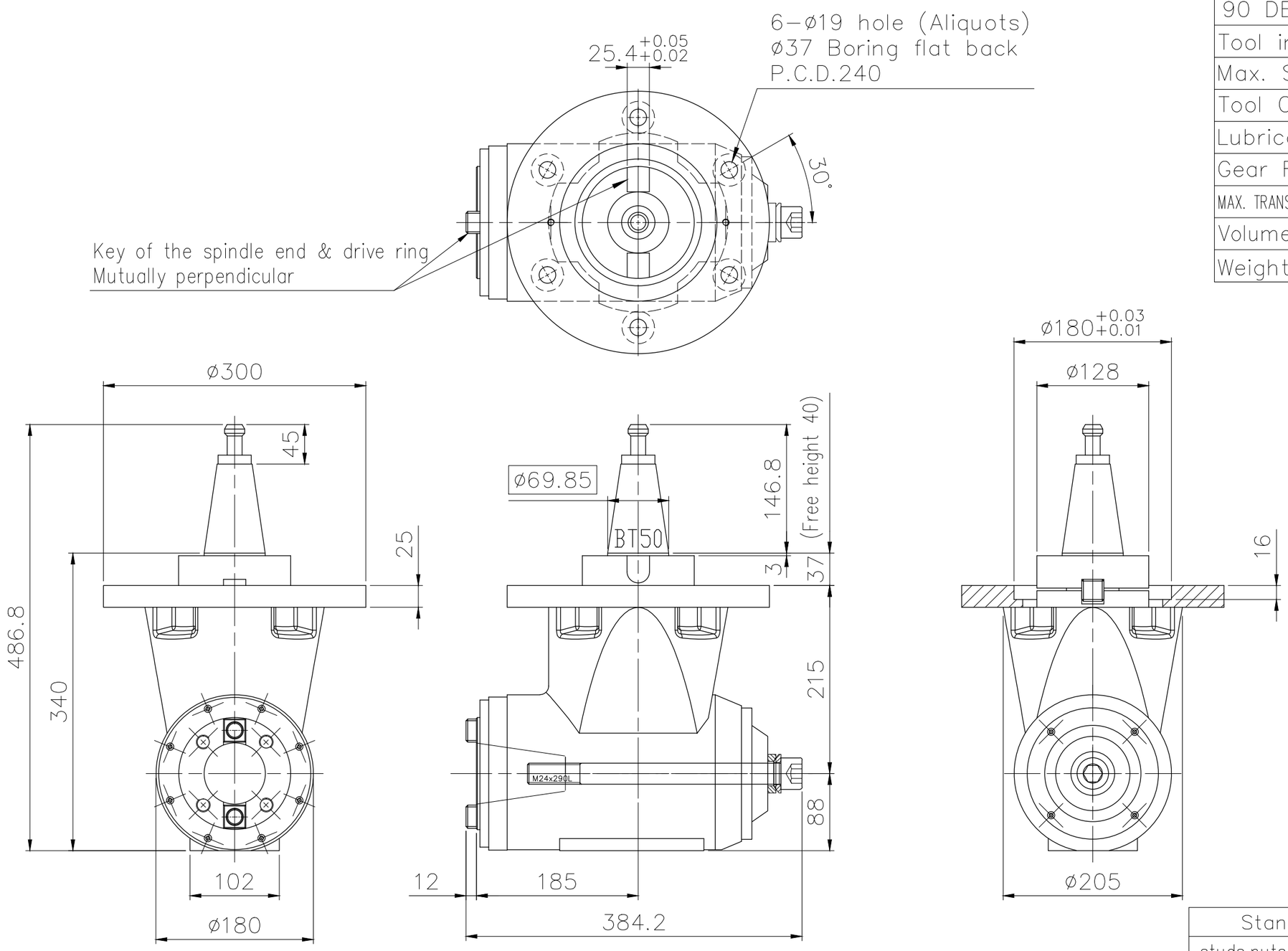

Standard Accessories	
studs,nuts,washer	M18x70L−6 set
Tool Studs/Hex Wrench	M24x290L Studs/19mm
Oiler + Gear oil	ISO VG68 200c.c.
Storage Device	Metal box

PERMISSIBLE MACHING BASIC DIMENSION DEVIATIONS					
>0	>6	>30	>120	>400	>1000
±0.05	±0.10	±0.15	±0.20	±0.30	±0.50
PERMISSIBLE DRILLING BASIC DIMENSION DEVIATIONS					+0.25 −0.05
PERMISSIBLE ANGLE BASIC DIMENSION DEVIATIONS					±0.5°

DRAWN		
DESIGNED		
CHECKED		
APPROVED		
SCALE	1 : 5	

setco Precision Solutions

NAME

DWG.NO. X55S11

ver.	coordinates	Changing content	Modified by	date